FRIGA-BOHN®

V-KING

V-shaped coil axial fan dry cooler
Industrial range

WG

50 - 2200 kW

To best meet the needs of your application, two versions of V-KING are available:
- **V-KING VC**: combines **compactness** and **high efficiency**!
- **V-KING VI**: guarantees **low pressure drop** and **high power**!

Adaptability: more than 4600 possible models to suit your project.

Reduced footprint to **save space**.

Optimization of noise levels depending on the fan chosen.

CASING

Epoxy painted metal structure (RAL 9003) for maximum corrosion resistance.

OPTIONS	
PAV	Anti-vibration pads.
RAL	RAL other than 9003 for the structure.
CC4	Corrosion-protected casing (C4).
CC5	Corrosion-protected casing (C5).

Select your coil treatment to extend your unit cooler's lifespan! Contact us.

COILS

Aluminium fins with 1.9 mm (VC) or 2.12 mm (VI) spacing.

Combined with staggered copper tubes, the coils are very efficient and compact.

High-performance and long-lasting:
- Non-louvred fins.
- Superimposed HV/LV circuit (can be selected on request).

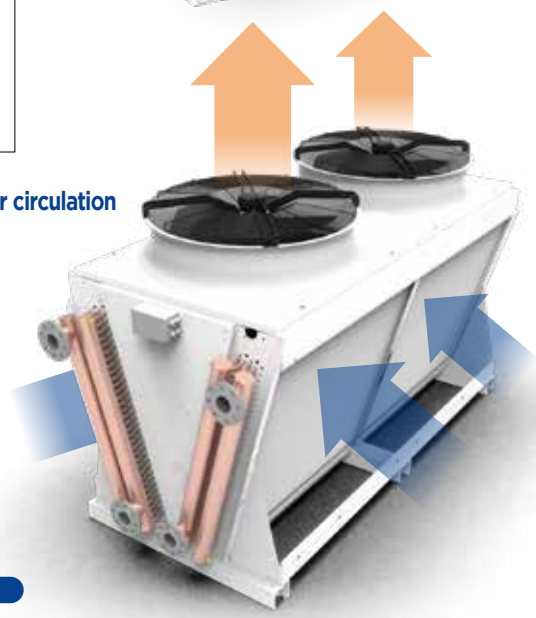

OPTIONS	
MCI	Multi-circuits (to be defined according to the project).
VID	Special circuit with gravity drain. CONTACT US
BCB	Flange to flange
VEX	Expansion tank.
WAS	Adiabatic water spray system
AAS	Advanced Adiabatic System: adiabatic spray system. CONTACT US
AAP	Advanced Adiabatic Pad System: adiabatic PAD system. CONTACT US

VENTILATION

OPTIONS	
IRP	Rotary proximity switch by motor.
ATT	Noise level attenuator.
CLV	Longitudinal partitioning (only on Parallel models).
CTV	Transverse partitioning.
CUV	Unitary partitioning: a partition separating all the modules.
	AC MOTORS
M60	Motor fan 400V/3/60Hz.
MTH	Thermal protection wiring.

ATT
Noise level attenuator!

<< **as an accessory** or **integral part of the motor** >>

CLV | CTV | CUV
Fan separations

Option to avoid air intakes when a fan is stopped, in case of multi-circuits and depending on the regulation chosen:

Standard	CLV	CTV	CUV
Partitioning every 2 modules	Longitudinal partitioning	Transverse partitioning	Unitary partitioning

- CTV option recommended with RT1 regulation.
- CLV option recommended with CE2 regulation.

PRODUCT ADVANTAGES

Long-lasting power and easy and efficient maintenance, thanks to a non-louvred fin profile limiting clogging.

Wide range of products and combinations (5,500 models):
- 2 different fin geometries,
- 2 designs: In-Line or Parallel.
- 2 module sizes: 1,200 mm or 1,500 mm,
- numerous ventilation options,
- devices up to 12 m long,

High power for a small footprint.

Noise level reduction (EC motors, attenuator, etc.).

Reduced electricity consumption (low speed motors or EC motors).

Possibility of combined HV/LV circuits:
- a single product for 2 applications (one low temperature water circuit and one high temperature),
- a single coil pack to avoid intermediate clogging.

Non-louvred fins for easy maintenance (limited clogging).

In-Line V-KING

Parallel V-KING

TECHNICAL DETAILS OF OPTIONS ON AC MOTORS

AC MOTOR possible options			
WIRING AND BOX	Power	Standard:	**Power wiring on terminals** (no protection option integrated into this option).
		SCU	**Without motor wiring** (note that no regulation is possible with this option).
	Protection	CMP	**Motor protection box IP54**, including one circuit breaker per motor, a fault summary and a main switch. Possibility of floor mounting support kit (MSK).
		MSK	Floor support for cabinets above H = 800 x W = 1,000
REGULATION	**Simple** cascade on/off	RT1 (including CMP)	**Thermostatic regulation** in cascade in an IP54 enclosure allowing different regulation stages to be managed: **From 1 to 4 regulation stages** > possibility of managing 2 circuits. **From 4 to 10 regulation stages** • Configuration of day/night operation possible. • Integrated clock. 1 or 2 temperature sensors depending on the number of separate circuits present.
	Advanced control by variation	RT3 (including CMP) Variable frequency drive	**An IP54 ventilated control cabinet** with a variable frequency drive including its fuse protection. A temperature sensor to manage a circuit.

TECHNICAL DETAILS OF OPTIONS ON EC MOTORS

EC MOTOR possible options			
WIRING AND BOX	Power	Standard:	**Power wiring on terminals.** The power, fault, bus and control wiring is carried out.
		SCM	**Without motor wiring.**
		CCE	**Power wiring in IP54 box and protection by stage included (in L for each fan and in P for 2 fans).** The bus wiring is done.
REGULATION	Simple	SE1 (1)	**Direct control of the motors by customer 0-10 V signal:** one or two circuits possible.
	Advanced control	CE1 (2)	**Automatic speed control by temperature (setpoint to be adjusted via PLC by customer) / 1 circuit:** one temperature sensor and only one circuit possible.
		CE2 (2)	**Automatic speed control by temperature (setpoint to be adjusted via PLC by customer) / 2 circuits:** 2 temperature sensors and 2 separate circuits possible (contact us in case of multiple circuits).
		CE3 (2)	**Automatic speed control by temperature (setpoint to be adjusted via PLC by customer) / signal comparison:** 2 temperature sensors and signal comparison (contact us in case of multiple circuits).
ADDITIONAL FUNCTIONS		VMA	**Maximum speed setting** (configuration done on each fan, via a computer). Only with standard or **CCE**.
		MJN	**Possibility of setting a maximum night speed** (clock by signal 0/10). Only with **CE1 / CE2 / CE3**

(1) *Default option if no customer choice.*

(2) *CEE mandatory option*

VC(A)H(B) PU(C) 06(D)D(E) P(F)10(G) A3(H)

(A) **VC** = Fin spacing 1.9 mm - **VI** = Fin spacing 2.12 mm
(B) **H** = Class H motor (only for version **PU** and **SN**).
(C) **PN** = Power Normal - **PE** = Power Extra - **PU** = Power Ultra
SN = Silence Normal - **SE** = Silence Extra - **SU** = Silence Ultra
(D) Number of poles
(E) **D** = triangle coupling - **Y** = star coupling
(F) Fan arrangement: **L** = in-line fans - **P** = parallel fans
(G) Number of fans
(H) Type of module

Since the performance of V-KING varies considerably depending on the operating conditions, it is therefore not possible for us to present a selection method in this document. For more information, please consult our software.

		V-KING - VC / VI **POWER**				V-KING - VC / VI **SILENCE**						
		PN	**PU**	**H PU**	**PE** EC **motor**	**SN**	**SE**	**SU**	**H SN**	**SE** EC **motor**	**SU** EC **motor**	**SA** EC **motor**
Diameter		Ø 800	Ø 950	Ø 910	Ø 960	Ø 800	Ø 800	Ø 800	Ø 910	Ø 800	Ø 800	Ø 800
Poles		06P	06P	06P	EC	08P	12P	12P	08P	EC	EC	EC
400V/3/50Hz		3	3	3	3	3	3	3	3	3	3	3
Triangle (**D**)	**rpm**	830	870	890	380/960	640	440	-	650	250/1020	250/730	250/950
	W max.	1600	1920	1950	2990	820	330	-	880	2400	790	1850
	A max.	3,50	3,80	4,20	4,60	2,00	0,86	-	2,00	3,80	1,40	3
	dB(A)	80	87	82	57/90	71	68	-	75	49/88	49/78	48/84
Star (**Y**)	**rpm**	800	640	730	-	460	-	330	480	-	-	-
	W max.	1210	1170	1300	-	440	-	190	500	-	-	-
	A max.	1,55	2,20	2,30	-	0,90	-	0,39	1,05	-	-	-
	dB(A)	70	81	78	-	64	-	61	68	-	-	-

GENERAL

The freezing point of the refrigerant must always be at least 5K below the minimum winter ambient temperature of the installation site.

RISK OF FROST

A standard dry cooler cannot be completely drained by simply opening the bleed holes.
Always perform leak tests with the final refrigerant.
For application with water (without antifreeze), and if the ambient temperature can drop below 0 °C, the dry cooler must be properly designed to allow complete draining of the unit (VID option).

RECOMMENDATIONS

Installation according to best industry practice without forgetting:
- Bleeds and drains
- Expansion tank(s) (VEX option)
- Flexible sleeves
- Protection against vibrations
- Percentage of antifreeze sufficient
- Electrical protection of motors

Connection to a totally closed water loop, eliminating any risk of corrosion by oxygenation.
If used with non-ferrous metal water supply lines, protect against corrosion.

P06 A
P06 B

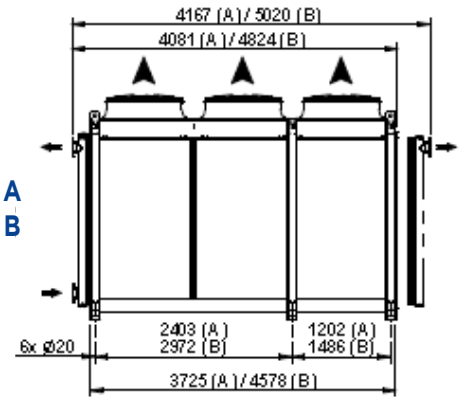

P04 A
P04 B

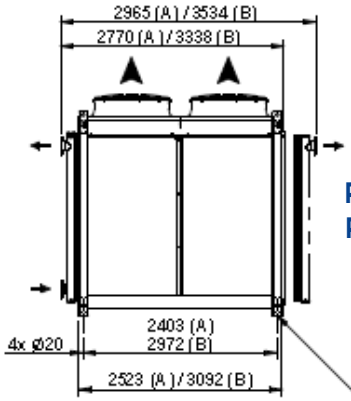

P08 A
P08 B

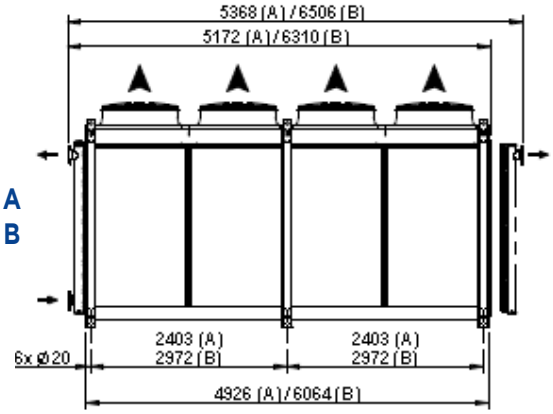

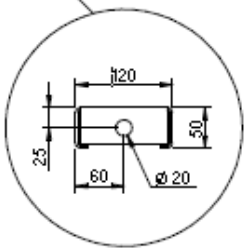

POINTS DE FIXATION
FIXING POINTS
BEFESTIGUNGSPUNKTE
PUNTOS DE FIJACIÓN
КРЕПЛЕНИЕ

P10 A
P10 B

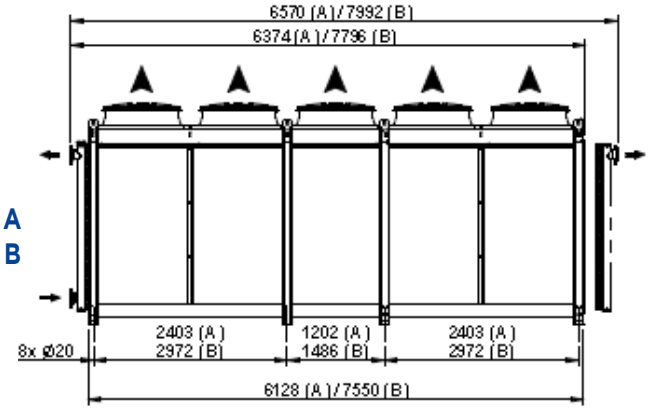

Type	H
PM04D/04Y	380
PU06D/06Y	350
PN06D/06Y	340
SN08D/08Y	330
SE12D/SU12Y	330
HPU06D/06Y	380
HSN08D/08Y	380
SAEC	330
SUEC	240
PEEC	370

P12 A
P12 B

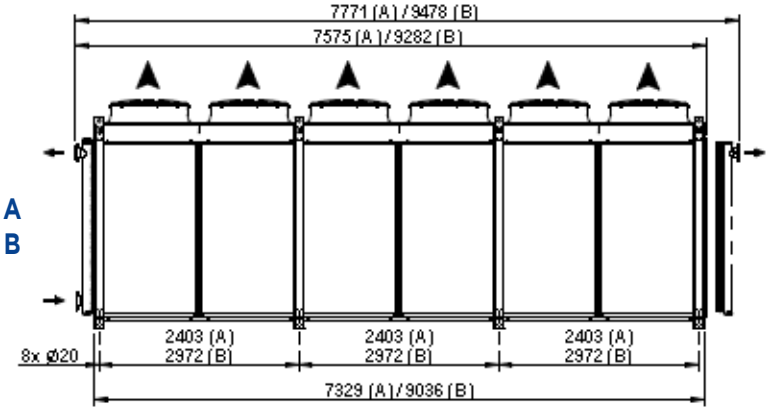

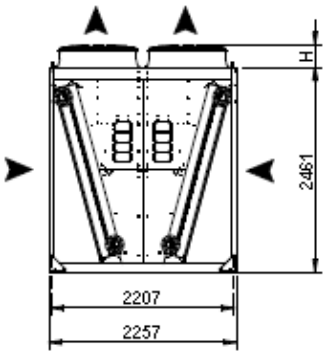

P14 A
P14 B

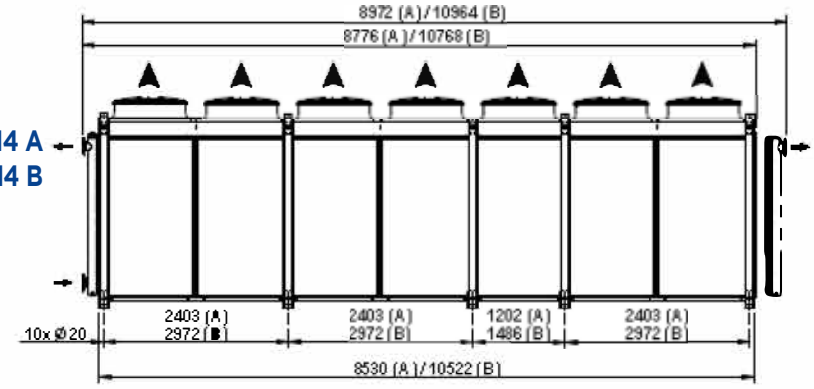

Type	H
PM04D/04Y	380
PU06D/06Y	350
PN06D/06Y	340
SN08D/08Y	330
SE12D/SU12Y	330
HPU06D/06Y	380
HSN08D/08Y	380
SAEC	330
SUEC	240
PEEC	370

P16 A

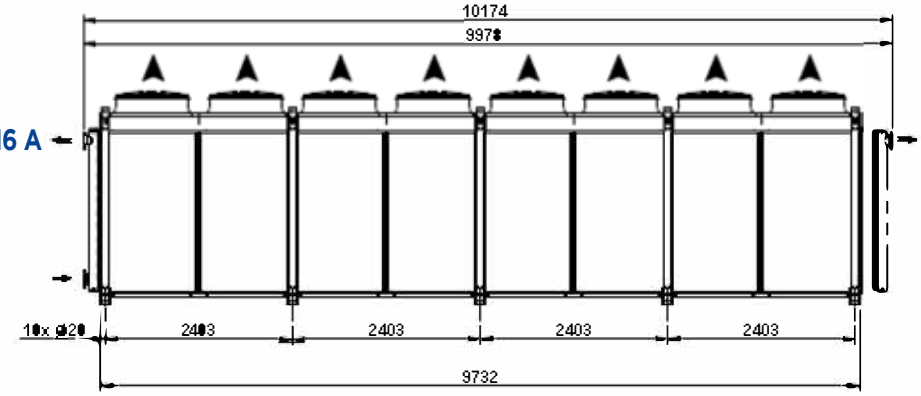

P16 A

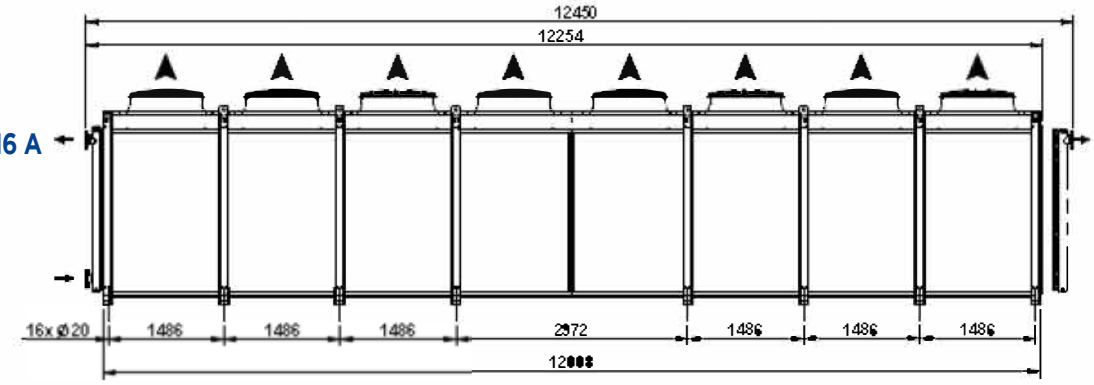

P18 A

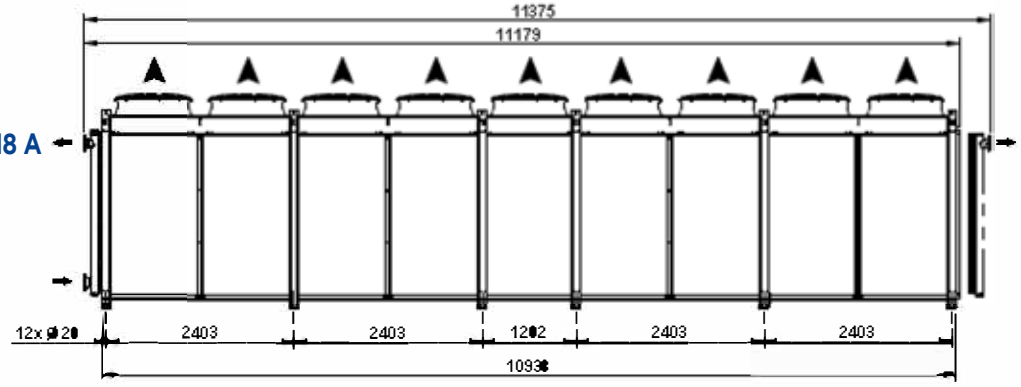

P20 A

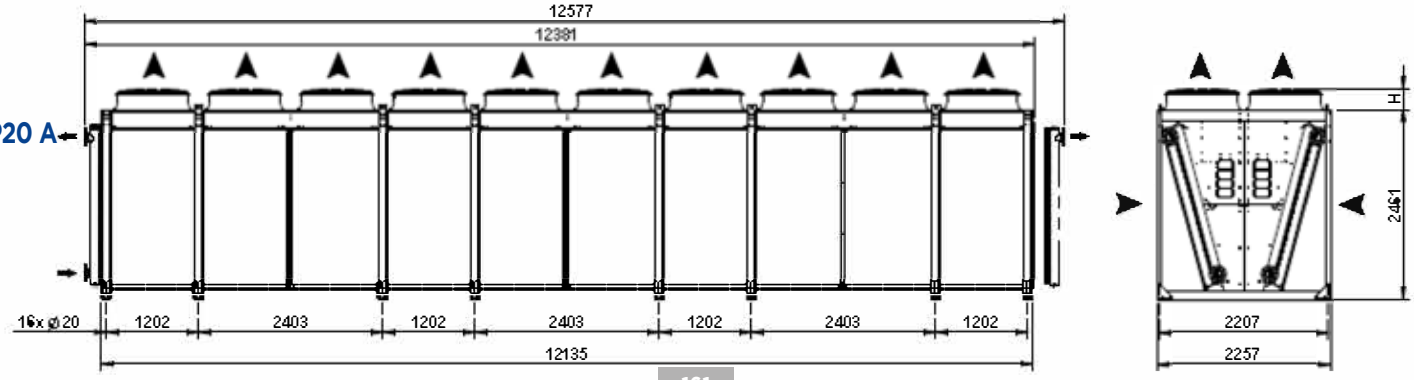

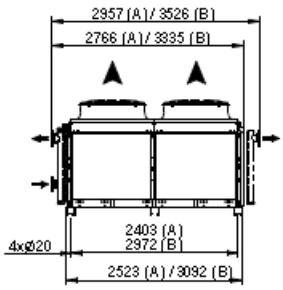

L02 A.B

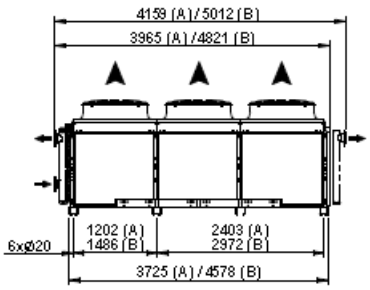

L03 A.B

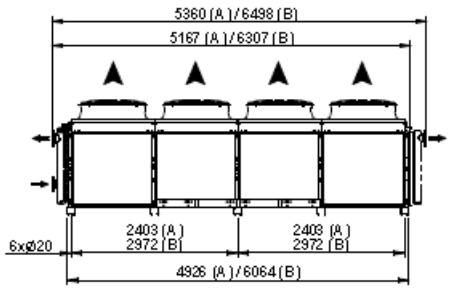

L04 A.B

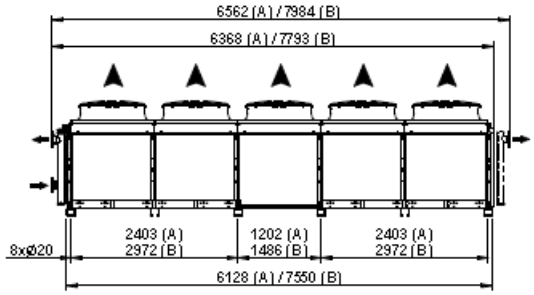

L05 A.B

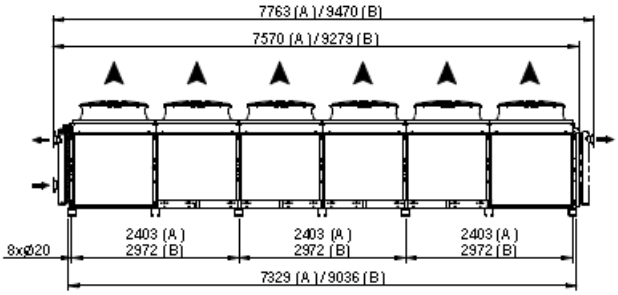

L06 A.B

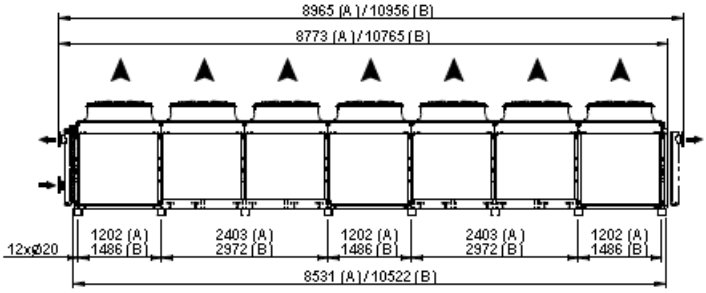

L07 A.B

Type	H
PM04D/04Y	380
PU06D/06Y	350
PN06D/06Y	340
SN08D/08Y	330
SE12D/SU12Y	330
HPU06D/06Y	380
HSN08D/08Y	380
SAEC	330
SUEC	240
PEEC	370

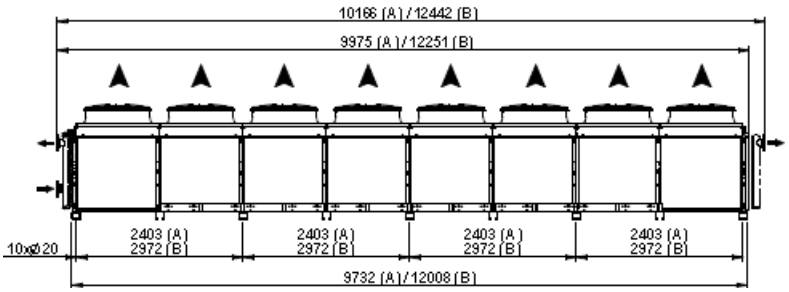

L08 A.B

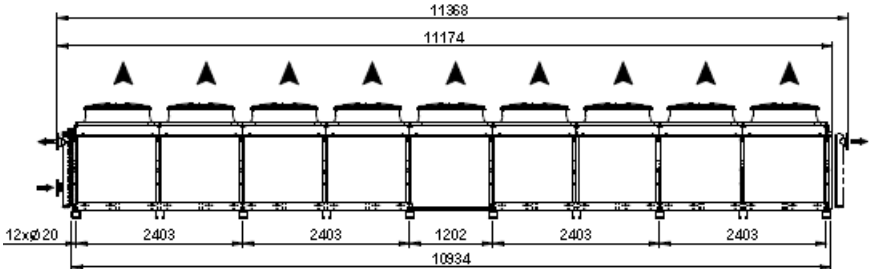

L09 A.B

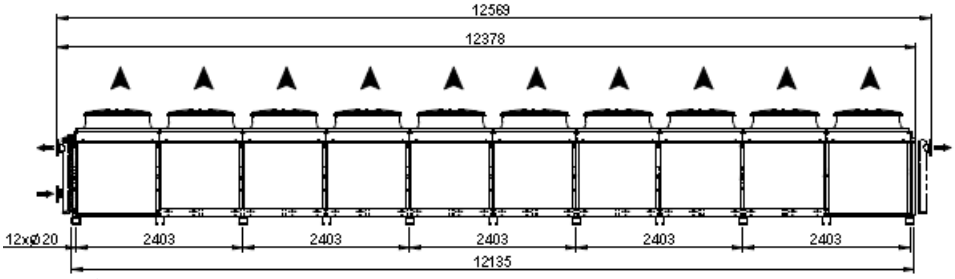

L10 A.B

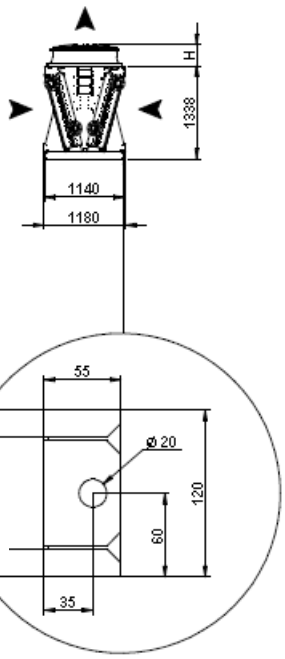

POINTS DE FIXATION
FIXING POINTS
BEFESTIGUNGSPUNKTE
PUNTOS DE FIJACIÓN
КРЕПЛЕНИЕ